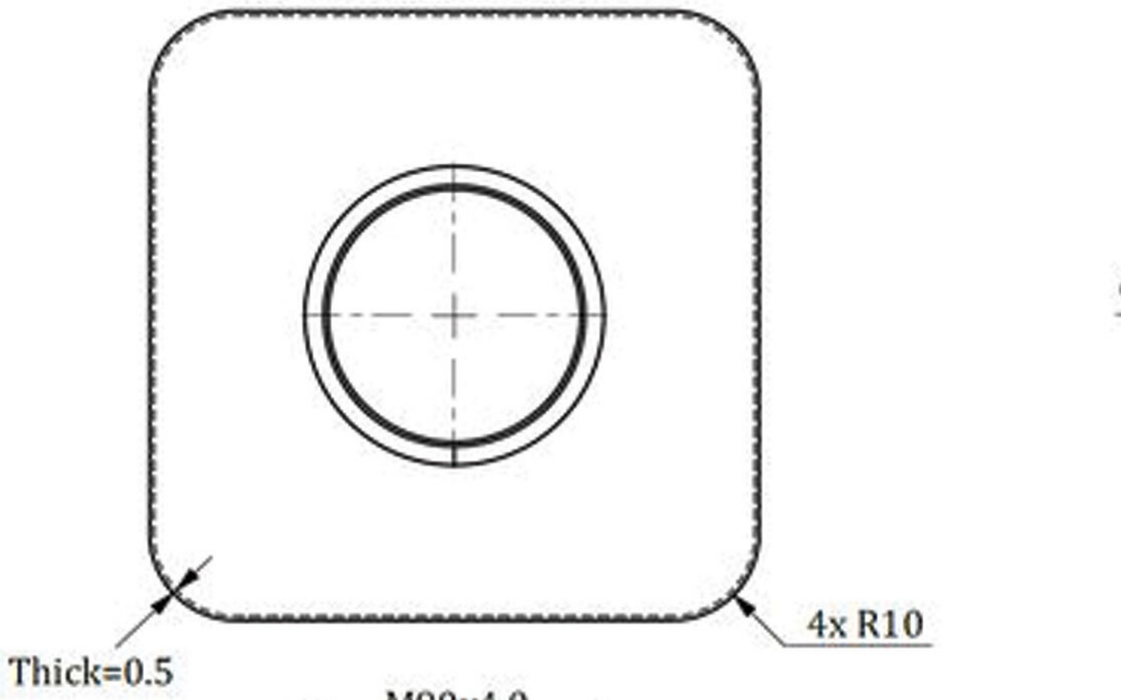

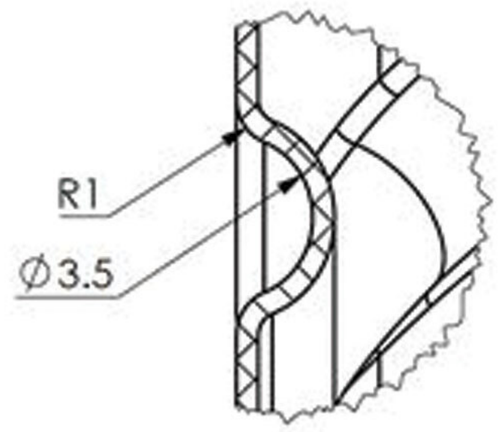

DETAIL A
SCALE 5 : 1

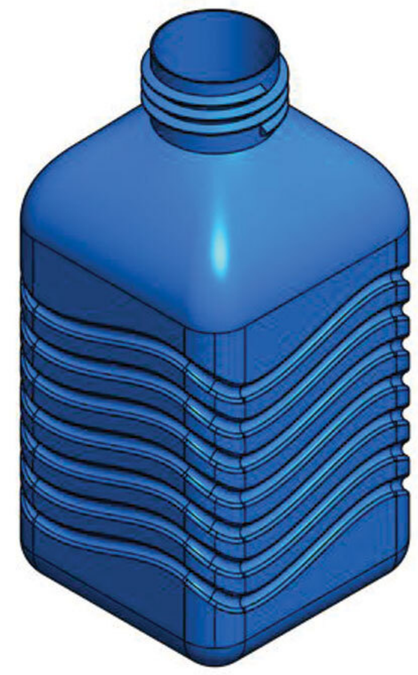

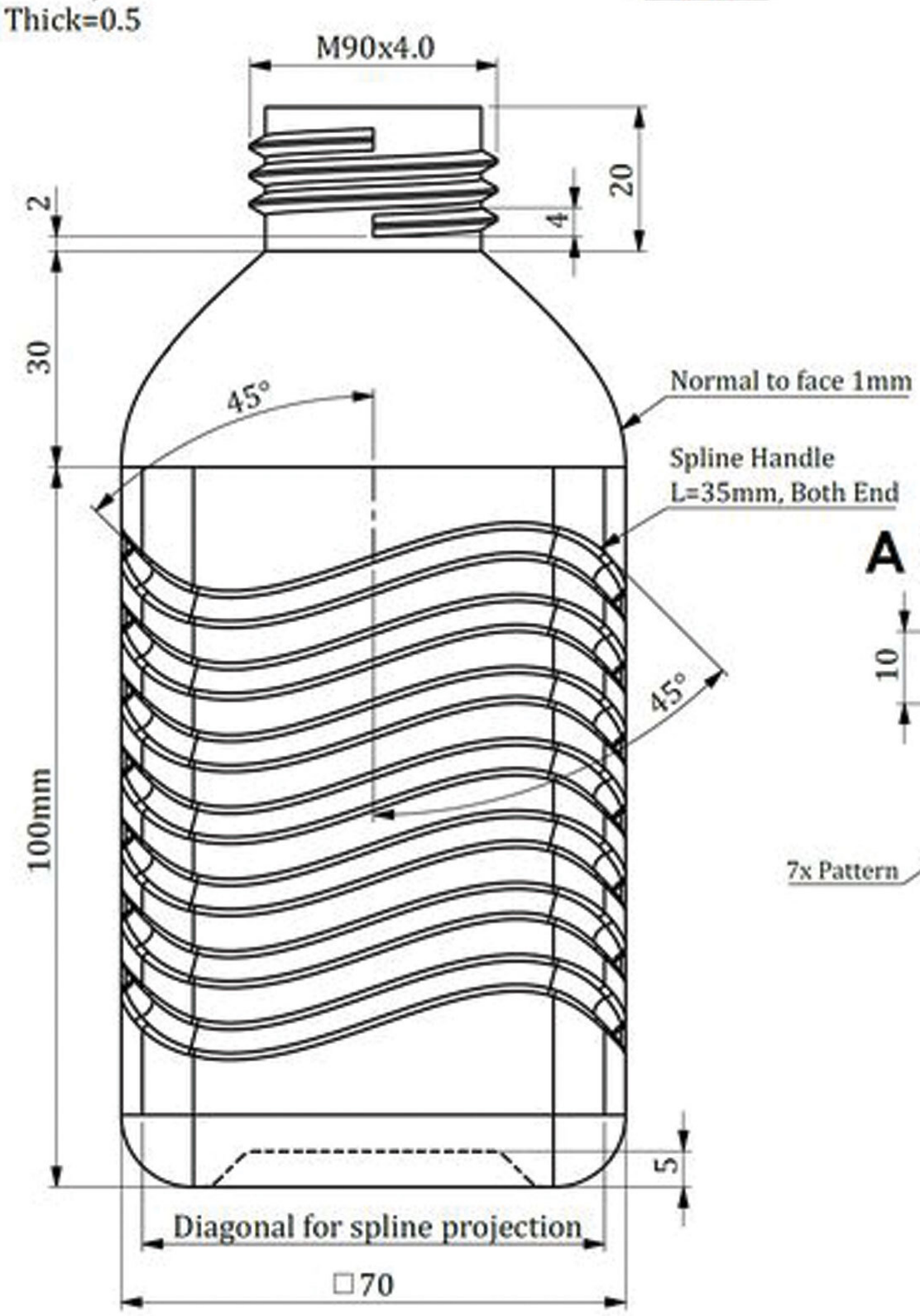

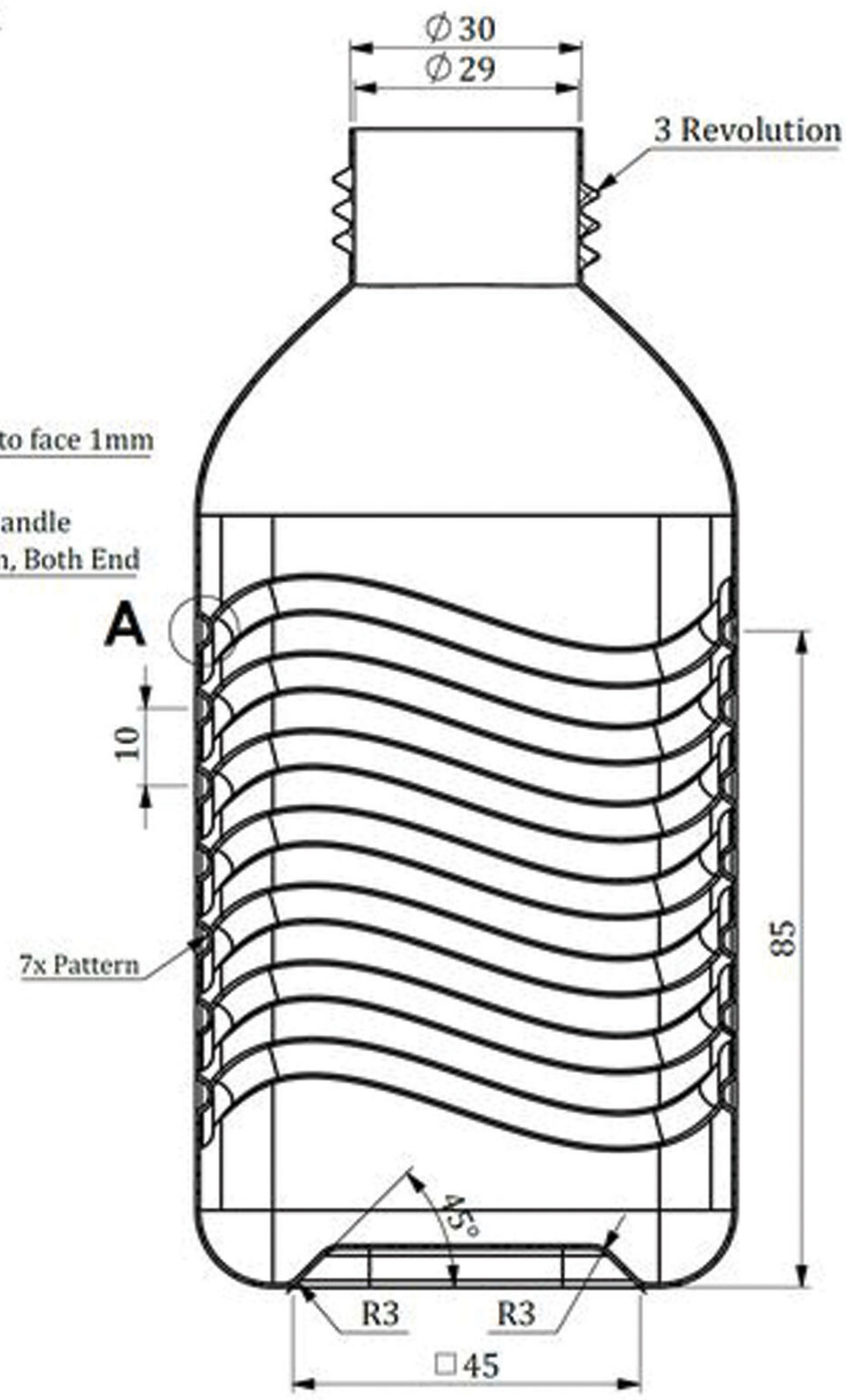

SECTION B-B

Note:

1.All Dimensions are in Millimeters.
2.Wave Pattern Corner Radius are 1mm.
3.Bottle Thickness are 0.5mm.
4.Gap Between The Wave Patters are 10mm.

YouTube @HoumanLadan
contact@hoomanladan.com
www.hoomanladan.com
Hooman_Ladan