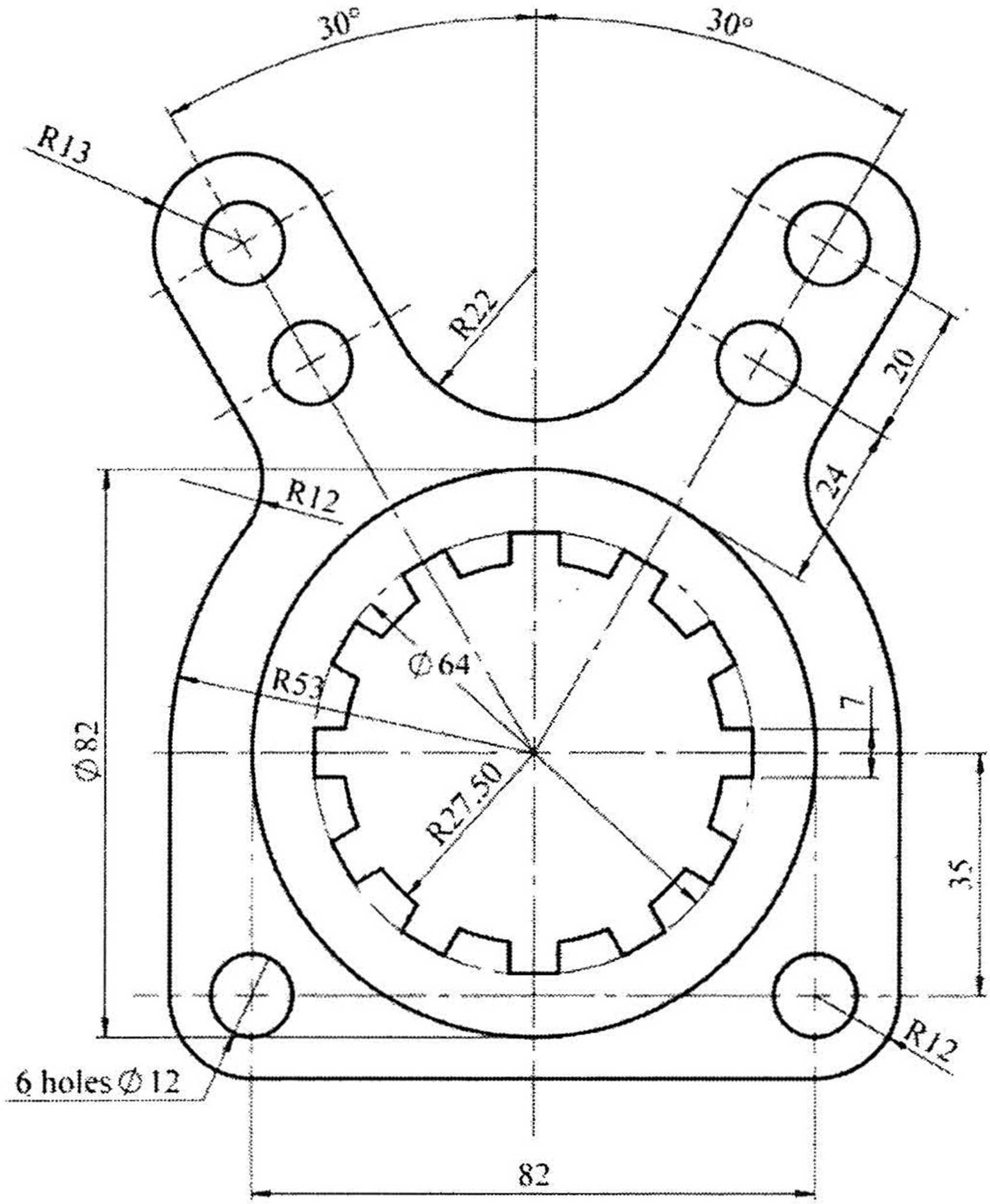

YouTube @HoumanLadan
contact@hoomanladan.com
www.hoomanladan.com
Hooman_Ladan